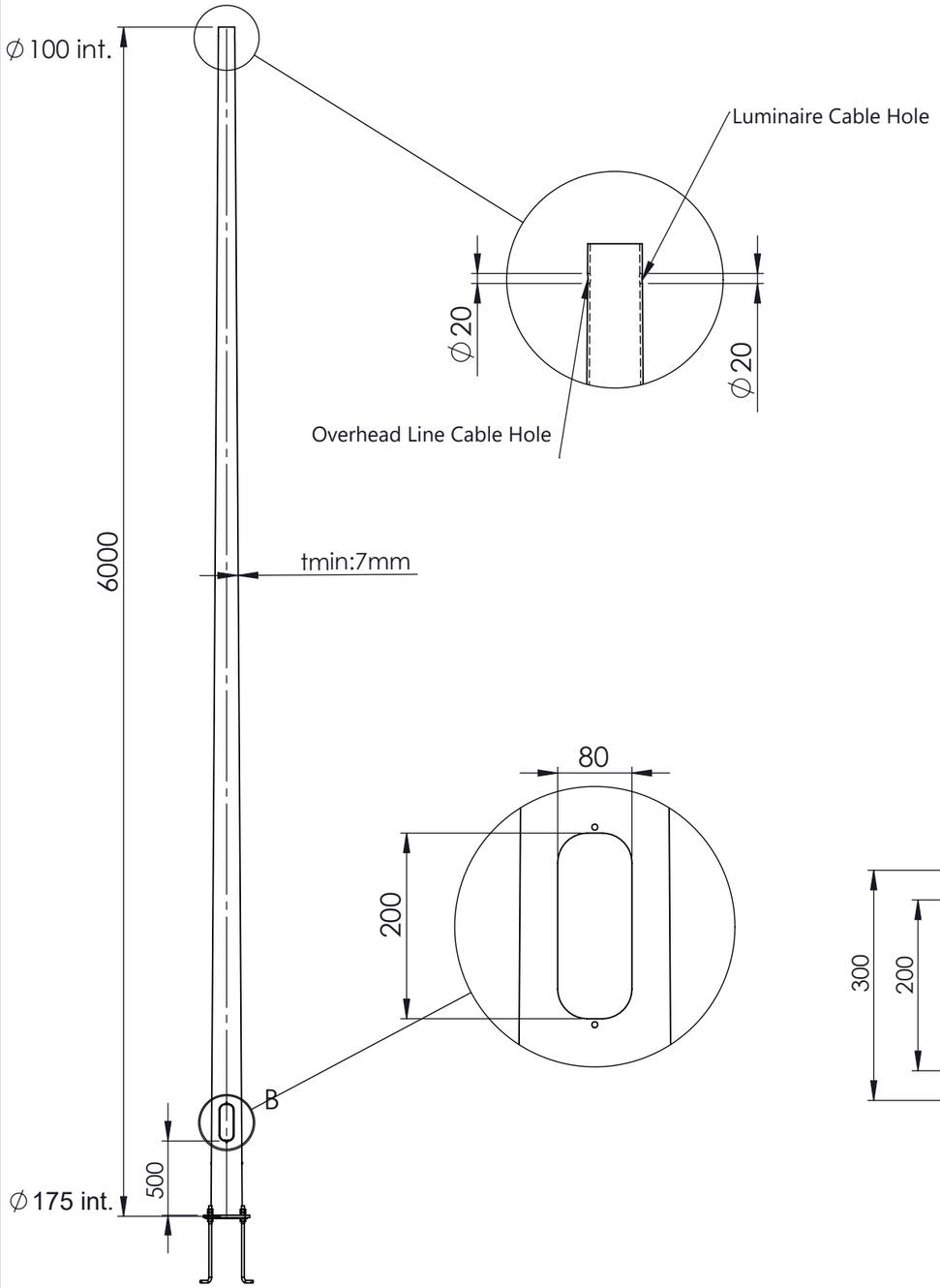

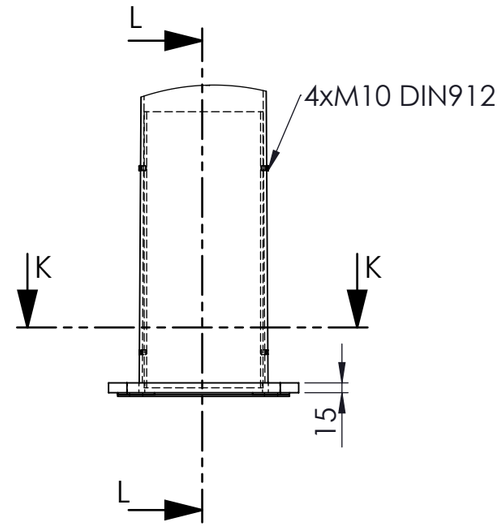

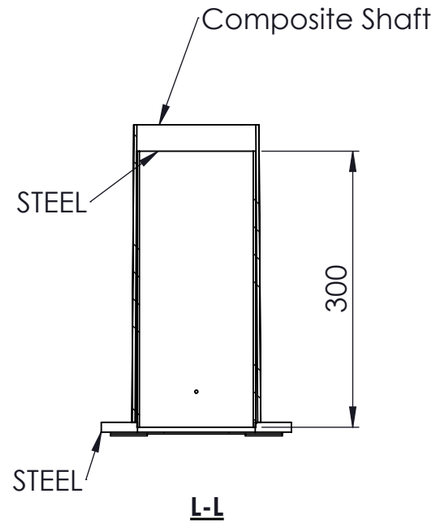

Steel Base Support

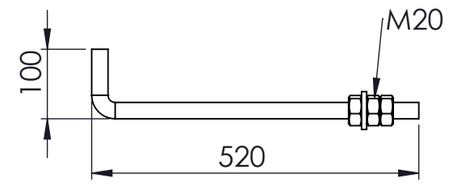

Anchor Bolt

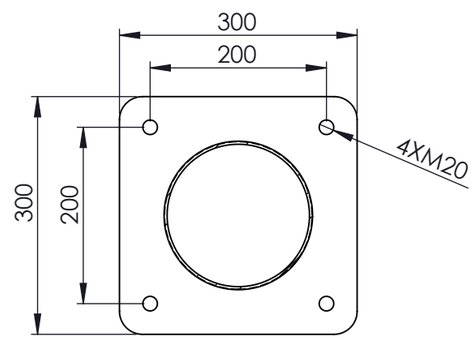

K-K

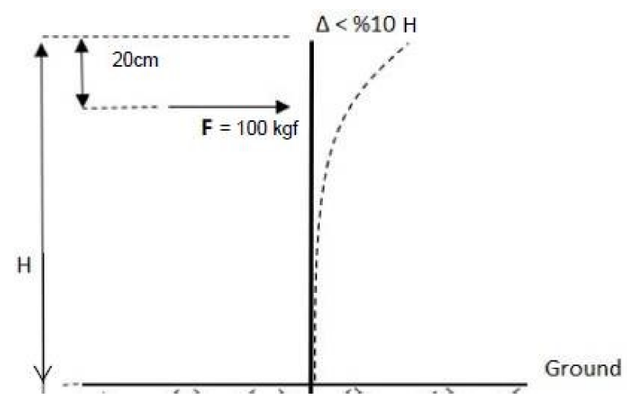

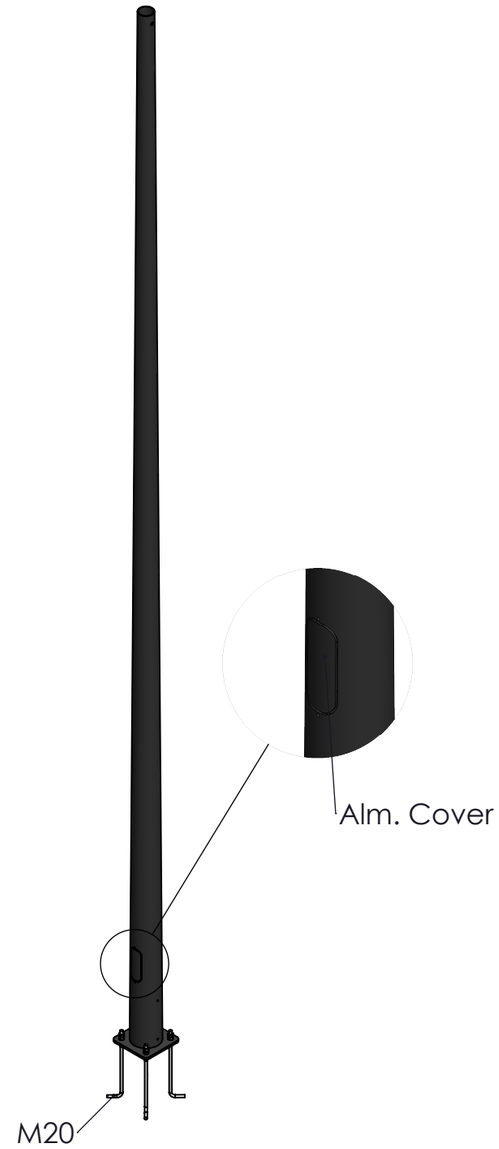

GENERAL NOTES / GENEL NOTLAR	MATERIAL / MALZEME			NAME / İSİM	SIGN / İMZA	DATE / TARİH
	SHAFT / GÖVDE	Glass Polyester	DESIGN / HAZIRLAYAN	B.UNLU		
* ALL DIMENSIONS ARE IN mm.	FLANGE / FLANŞ	S235	DRAWN / CIZEN	B.TABUR		
TÜM ÖLÇÜLER mm'DİR.	BRACKET/ KONSOL	Glass Polyester	CHECKED / KONTROL	O. ECERDİR		
* ALL STEEL ITEMS,BOLTS,NUTS & WASHERS TO BE HOT-DIP GALVD.AS PER (EN ISO 1461)			APPROVED / ONAY	S.USTUN		
TÜM ÇELİK ELEMANLAR,CIVATA, SOMUN VE RONDELALAR SICAK DALDIRMA GALVANİZDİR. (EN ISO 1461)			DESIGN NOTES / TASARIM NOTLARI			
* BOLTS CAN BE USED AS (ISO 898) 5.8 & 6.8 & 8.8 ACCORDING TO DESIGN CRITERIA.			DESIGN WIND SPEED / TASARIM RÜZGAR HIZI		130 Km/h	
TASARIM KRİTERLERİNE GÖRE CIVATALAR (ISO 898) 5.8 & 6.8 & 8.8 OLARAK KULLANILABİLİR.			FACTOR OF SAFETY / GÜVENLİK KATSAYISI			
			DESIGN STANDART / TASARIM STANDARDI		EN40-7	

6m Composite Pole

SIP/TEK.NO			
PAFTA NO	MC-2019-257		
TARIH	19.03.2020		
			REV
SHEET 1 OF 1	SCALE 1:100	A3	A

MİTAŞ COMPOSITES
Aso 2 ve 3 org. san. bölgesi
Alcı mah. 2001 cad. no:16
TEMELLİ/SİNCAN/ANKARA
Tel: 0312 296 25 48
Fax: 0312 296 29 99
info@mitascomposites.com